Straight Blade Devices

20A, 125V, 2 Pole, 3 Wire Grounding 4-PLEX® Hospital Grade Receptacle

HUBBELL

Features

- Anchor hole and loop feature secures solid wire for fast, easy terminations
- Triple wipe contacts
- Easily accessible break-off tabs for split wiring
- Three conductors energize all four outlets

Ordering Information

Description	Device Color	UPC	Catalog Number
Hospital grade, 4-PLEX receptacle	Red	783585015781	HBL420HR

Listings

UL Listed to UL498 File No. E2186
Certified to CSA, C22.2, No. 42 File 285
NEMA® WD-6 Compliant

Specifications

Face	Polycarbonate
Base	PBT
Power Contacts	.032 in. (.8) Brass
Ground Contacts	.031 in. (.8) Brass
Ground Plate	.032 in. (.8) Plated Steel

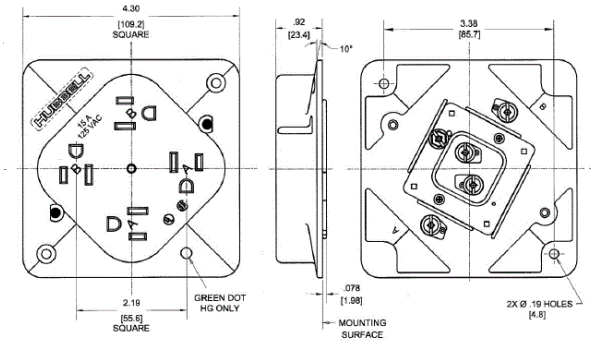

Performance

Electrical

Current Interrupting	Capable of withstanding a fault level of 1000A, per UL498
Dielectric Voltage	Withstands 2,000V minimum

Mechanical

Product Identification	Ratings are a permanent part of the device
Terminal Accommodation	#12 AWG copper stranded or solid conductor only
Terminal Identification	Terminals identified in accordance with UL 498 and CSA

Environmental

Flammability	UL 94V-2
Operating Temperatures	Maximum continuous 75°C; minimum -40°C (w/o impact)

Accessories

4-PLEX Adapter Plate	HBL4APR

Resources

Customer Use Drawing
eCatalog

Dimensions in Inches (mm)

Hubbell Wiring Device-Kellems • Hubbell Incorporated (Delaware) • 40 Waterview Drive • Shelton, CT 06484
Phone (800) 288-6000 • Fax (800) 255-1031 • Specifications subject to change without notice.

HUBBELL® Wiring Device-Kellems