IEC Pin and Sleeve

Accessories

Back Box

Ordering Information

Description	UPC	Catalog Number
Adapts 16, 20, 30 and 32A Watertight IEC Pin and Sleeve devices to standard wall box	783585882215	**AA2030PS**

Device Color
Gray

Specifications

Accessory Item	Adapter
Material	Non-Metallic

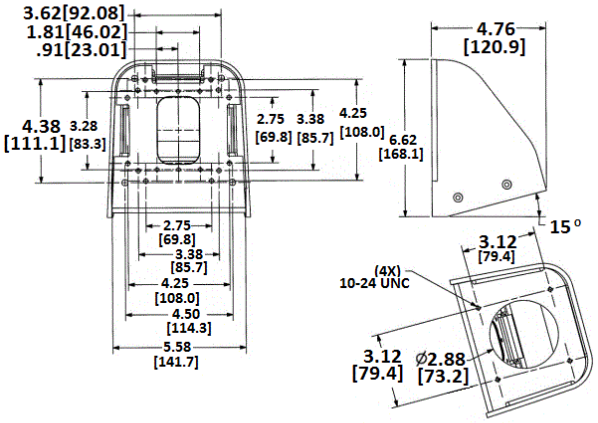

Performance

Environmental

Moisture Resistance	IP54 Suitability

Accessories

Recepatcle/Inlet Accommodation	**16A, 20A, 30A & 32A IEC Pin & Sleeve**

Online Resources

Customer Use Drawing
eCatalog
Installation Instructions

Dimensions in Inches (mm)

Hubbell Wiring Device-Kellems • Hubbell Incorporated (Delaware) • 40 Waterview Drive • Shelton, CT 06484
Phone (800) 288-6000 • Fax (800) 255-1031 • Specifications subject to change without notice.

Wiring Device-Kellems