NEXTSPEED

110 Connecting Block System

Field Termination Kit, 110

Features

- Includes 4-Pair Connecting Blocks
- Ideal for Use in Cross-Connect and Consolidation Point Applications
- Termination Strips on the Base are Notched and Divided into 5-Pair Increments
- Connecting Blocks are Color-Coded

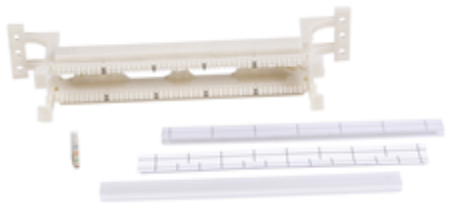

Ordering Information

Description	Color	Catalog Number	UPC
NEXTSPEED Field Termination Kit, 110/50-Pair, With 5-Pair Blocks	White	**110BLK50FTK5**	662620835730

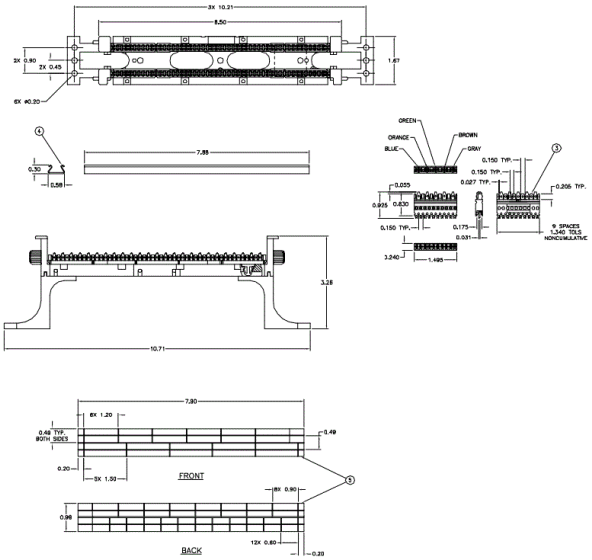

Listings

Category 5e Component Compliant
Permanent Link Compliant
ANSI/TIA/EIA-568-C.2 Compliant
ISO/IEC 11801 Class D Compliant
UL Listed
CSA Certified

Specifications

Material	Rugged high impact, flame-retardant polycarbonate

Online Resources

eCatalog

Hubbell Premise Wiring