Technical Data

Effective March 1, 2018

SP15 & SP20 – Heavy Duty Switchpacks

Catalog#	Prepared by
Project	Date
Comments	Type

Can be easily mounted on or in a 4"sq. junction box, via ½" in nipple

Available for 120, 220, 240, 277 & 347 VAC operation

Overview

Switchpacks provide 15 VDC operating voltage to all low voltage, 15 VDC occupancy sensors and daylighting controllers. A single switchpack can provide power for up to five sensors. Up to ten switchpacks can be connected to one sensor for control of multiple circuits. Isolated contacts may also be used to control HVAC, contactors, motors, etc.

Features

- Replaces separate transformers and relays
- Zero-crossing circuit provides increased durability, especially with today's high inrush loads
- Capable of switching up to 20 Amps
- Suitable for Plenum use
- Rated for Ballast, Tungsten and Motor Loads
- LED ready

Powering Business Worldwide

Specifications

Power Requirements	**Input:** (120/277 VAC-SP20-MV), (347 VAC-SP15-347), (220-240 VAC-SP20-240), 50/60 Hz operation. Contacts are isolated and may be used to control low voltage circuits
	Output: 15 VDC 125mA to operate up to five Greengate sensors
Control	Connecting the 22 AWG red and blue control leads to each other will close the relay contacts
Ballast Compatibility	Compativle with LED, magnetic and electronic ballasts
NOTE	The life of some compact fluorescent lamps (CFLs) is shortened by frequent automatic or manual switching. Check with the CFL and ballast manufacturer to determine effects of cycling
Operating Environment	Temperature: 32°F - 104°F (0°C - 40°C)
	Relative humidity: Less than 95%, non-condensing
	For indoor use only
Housing	Medium impact injection molded housing. ABS resin complies with UL 94V-0. Plenum rated for external junction box mounting, with Teflon coated leads
Motor Load	1 HP 120-240 VAC; 2 HP 250 VAC
Size	2 15/16″ x 2 7/16″ x 1 11/16″
Mounting	Mounts to the side of a 4" square box via 1/2" knockout
Standards	UL, CSA Listed

Description/Operation

The switchpack has two main components: a transformer and one high current relay. The transformer has a primary line voltage input and a secondary low voltage output. The low voltage output, 15 VDC, provides operating power to connected low voltage Greengate occupancy sensors. When an occupancy sensor detects motion, it electrically closes an internal circuit, pulling up the control signal between the sensor and the switchpack. This signals the switchpack to close its high current relay, turning the connected load on.

Applications

The switchpack is designed to work with low voltage sensors which require switchpacks. It cannot be used with sensors designed for use with any other low voltage relay systems. Consult sensor spec sheets for other sensor relay combinations.

Wiring Diagrams

A/B Switching

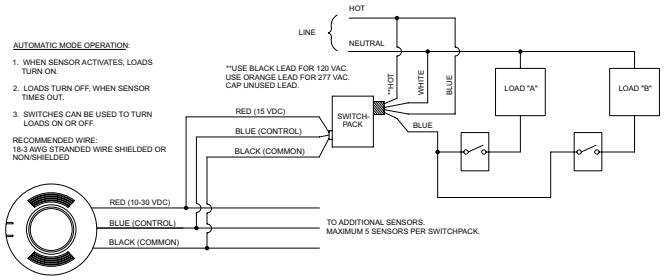

Three Way Switching

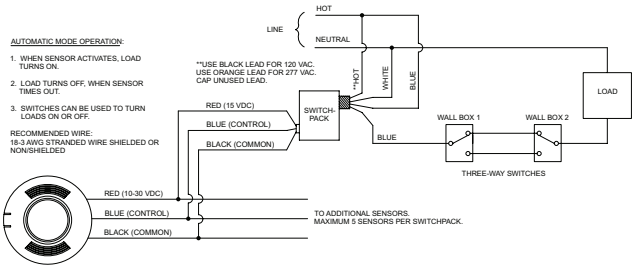

Standard Configuration

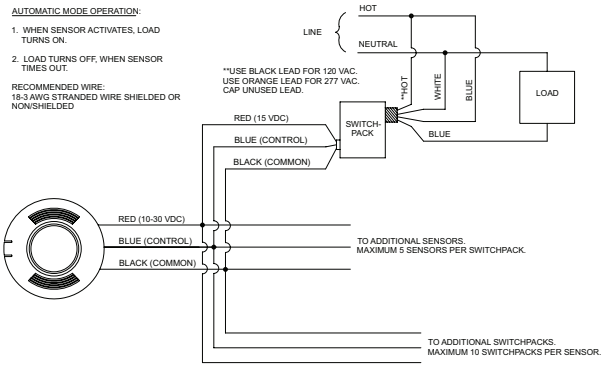

2 Circuits, 1 Sensor

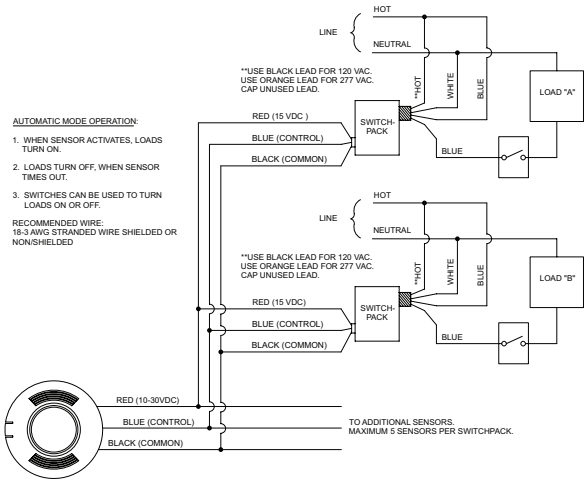

Mounting

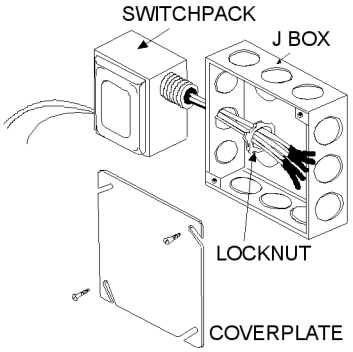

All connections are made via pigtails with twist-on wire connectors.

Note: Connect either the orange or black supply lead to the power source, depending upon the power requirements. Cap the unused lead.

Ordering

Catalog #	Ratings	(LED) Ballast	Tungsten	Motor (HP)	Output
SP20-MV	120/277 VAC, 50/60 Hz	20A	15A, 120V	1HP-120V, 2HP-250V	15 VDC, 125mA
SP15-347	347 VAC, 50/60 Hz	15A	NR	NR	15 VDC, 125mA
SP20-240	220-240 VAC, 50/60 Hz	20A	NR	NR	15 VDC, 125mA

Eaton
1121 Highway 74 South
Peachtree City, GA 30269
P: 770-486-4800
www.eaton.com/lightingsystems
For service or technical assistance:
1-800-553-3879

Printed in USA
Publication No. TD503133EN
March 1, 2018

Powering Business Worldwide

Specifications and dimensions subject to change without notice.